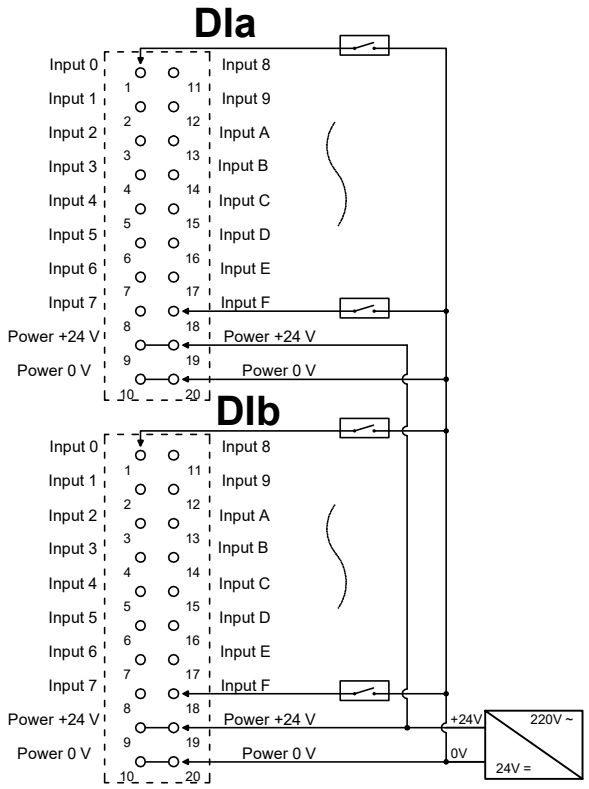

MT4-3200A

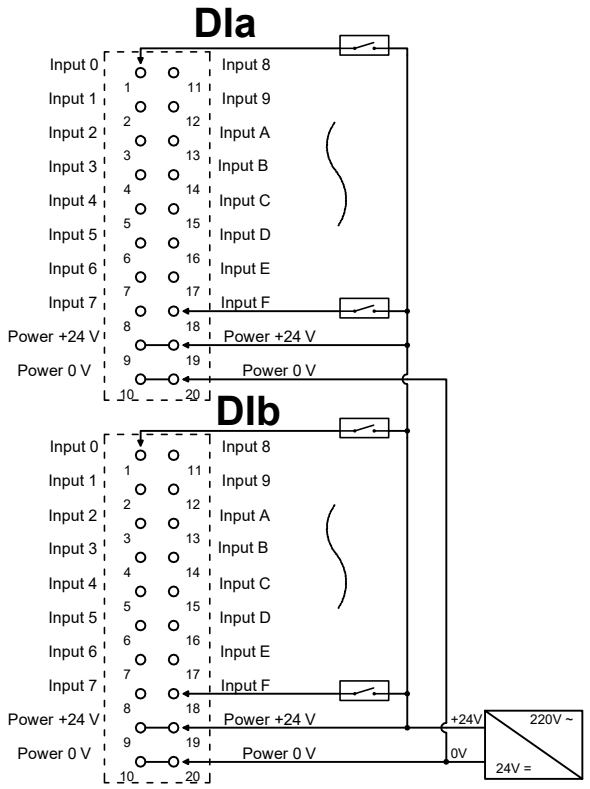

MT4-3200B

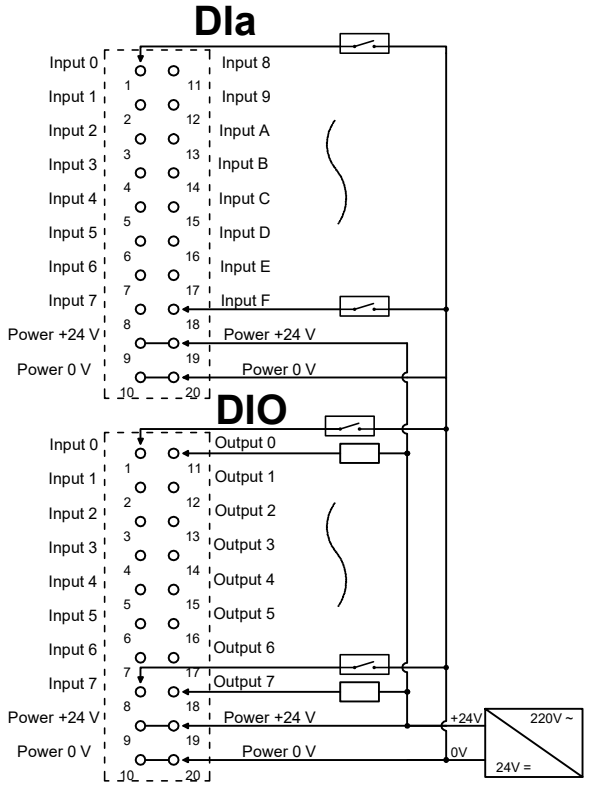

MT4-2408A

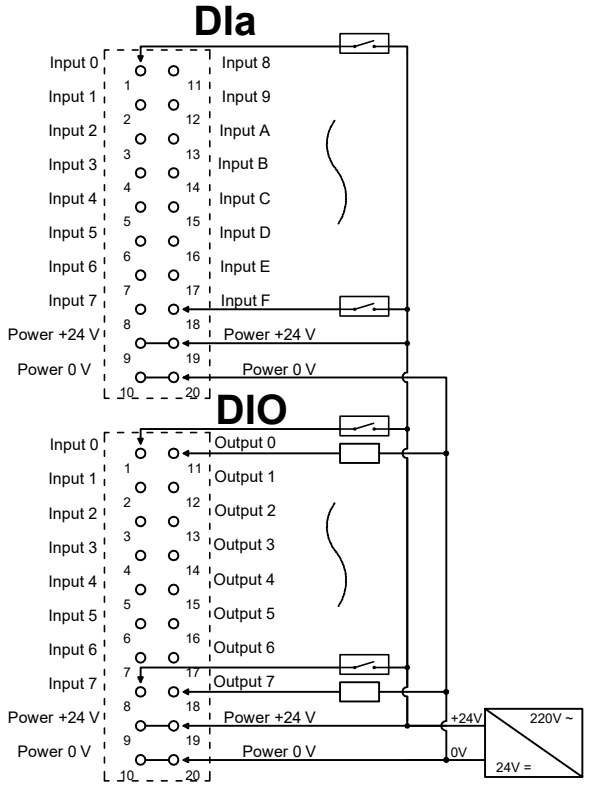

MT4-2408B

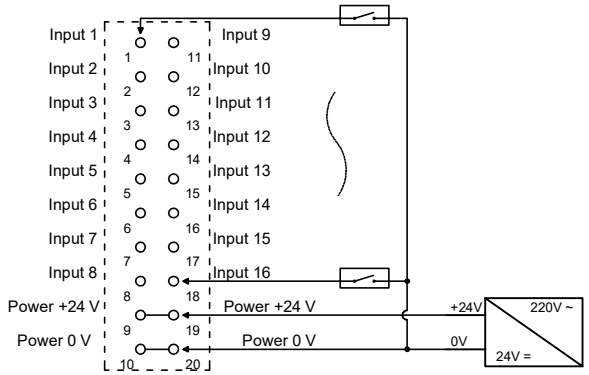

MT4-1600A

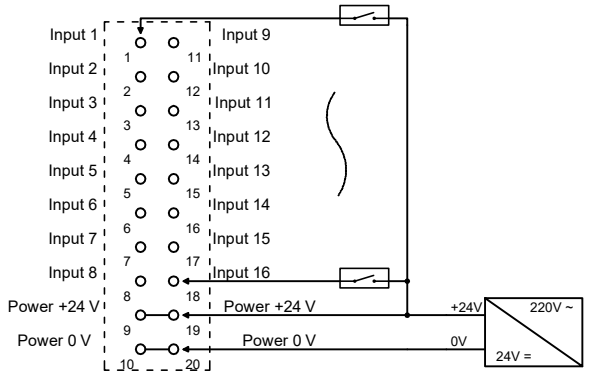

MT4-1600B

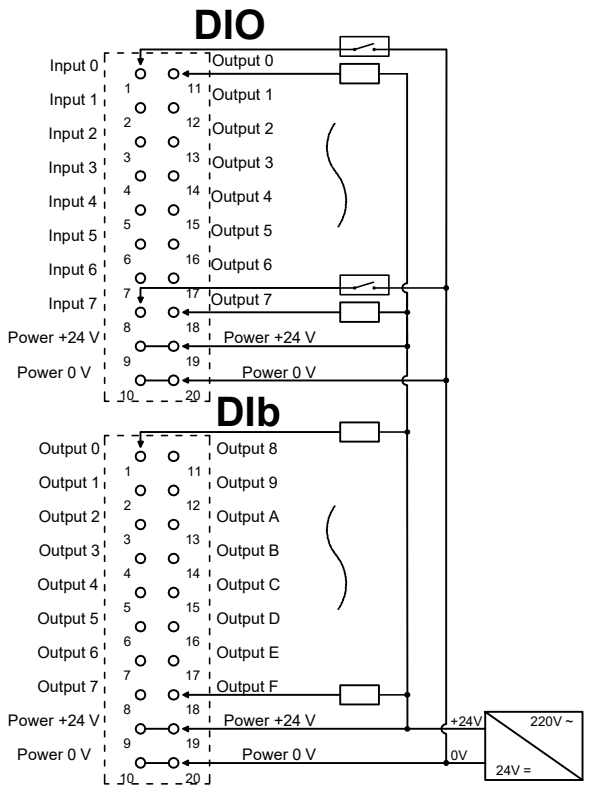

MT4-0824A

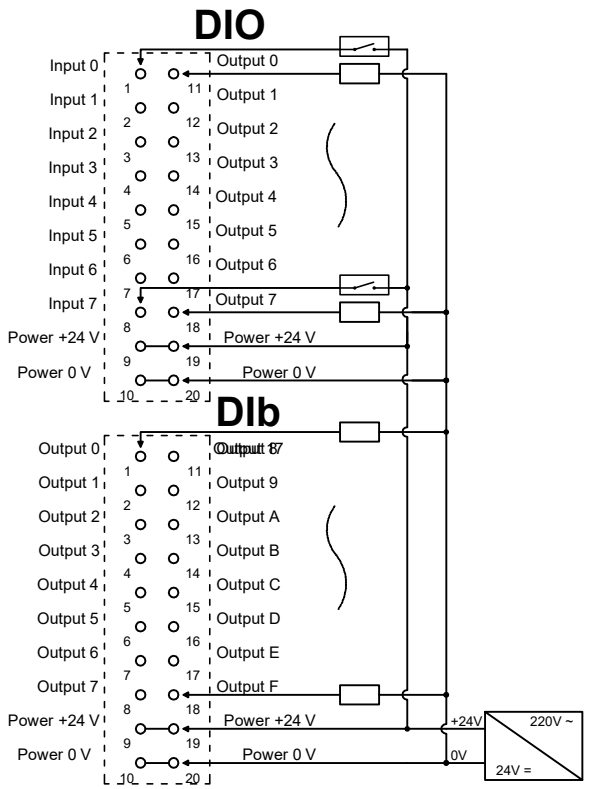

MT4-0824B

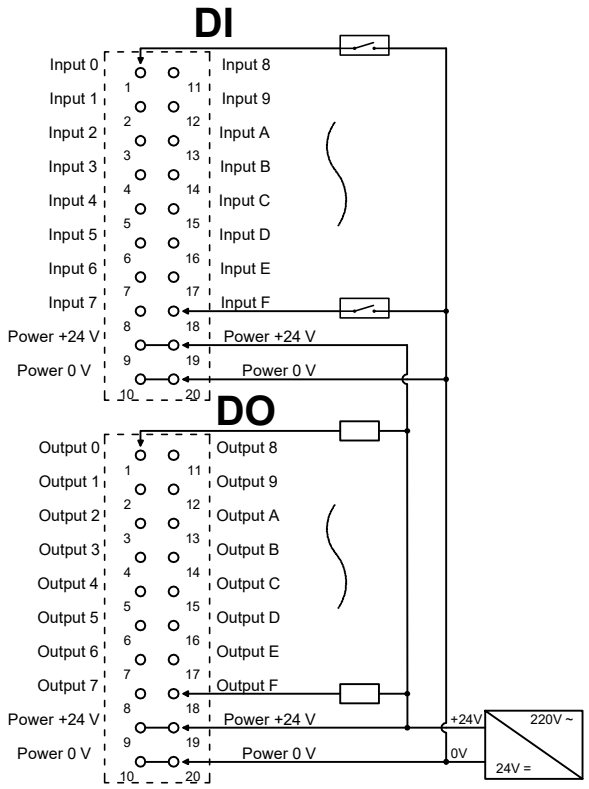

MT4-1616A

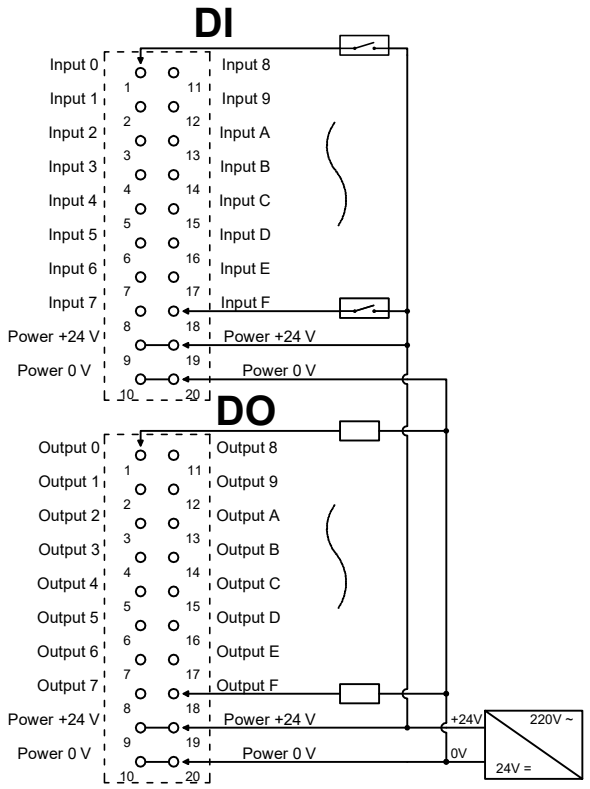

MT4-1616B

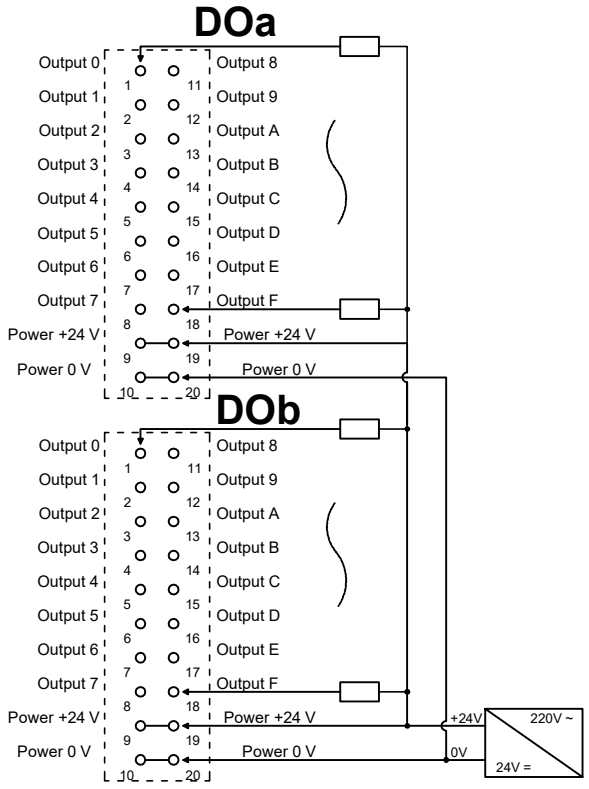

MT4-0032A

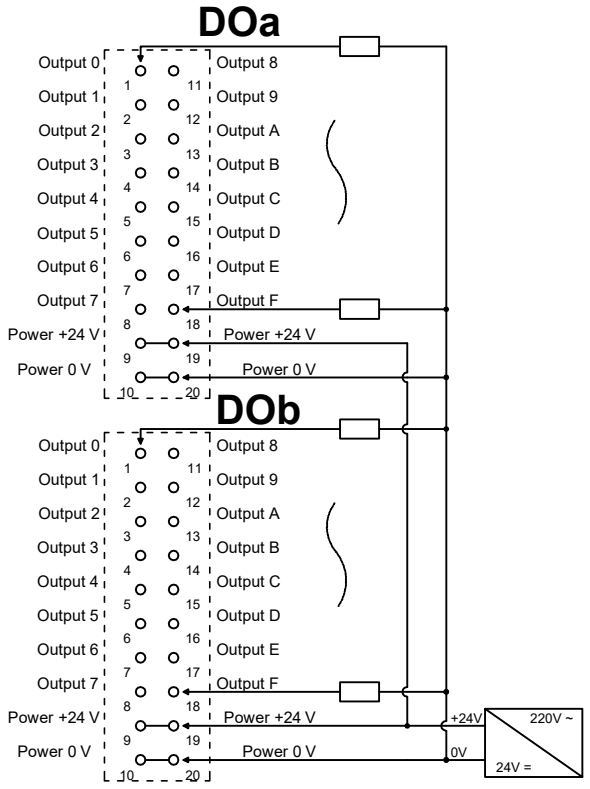

MT4-0032B

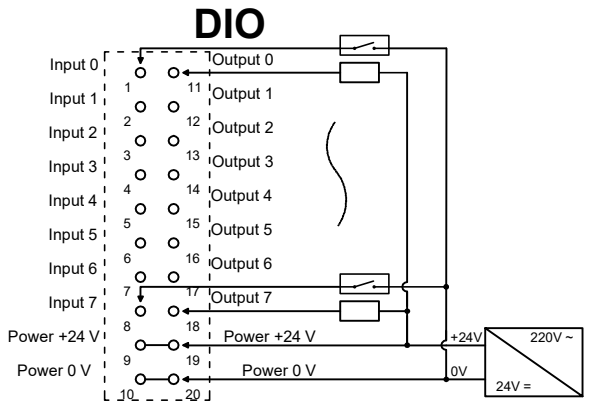

MT4-0808A

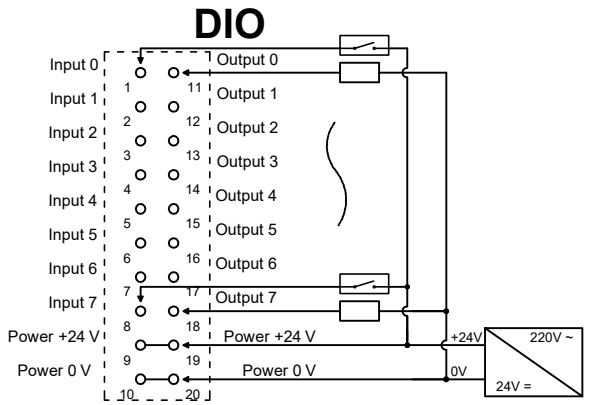

MT4-0808B

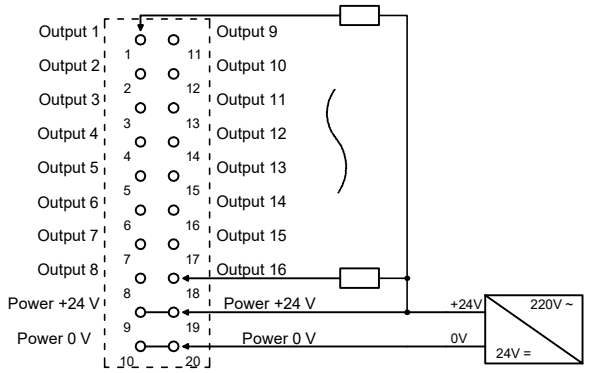

MT4-0016A

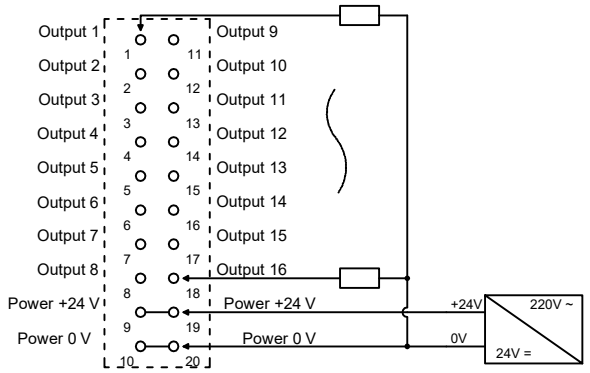

MT4-0016B

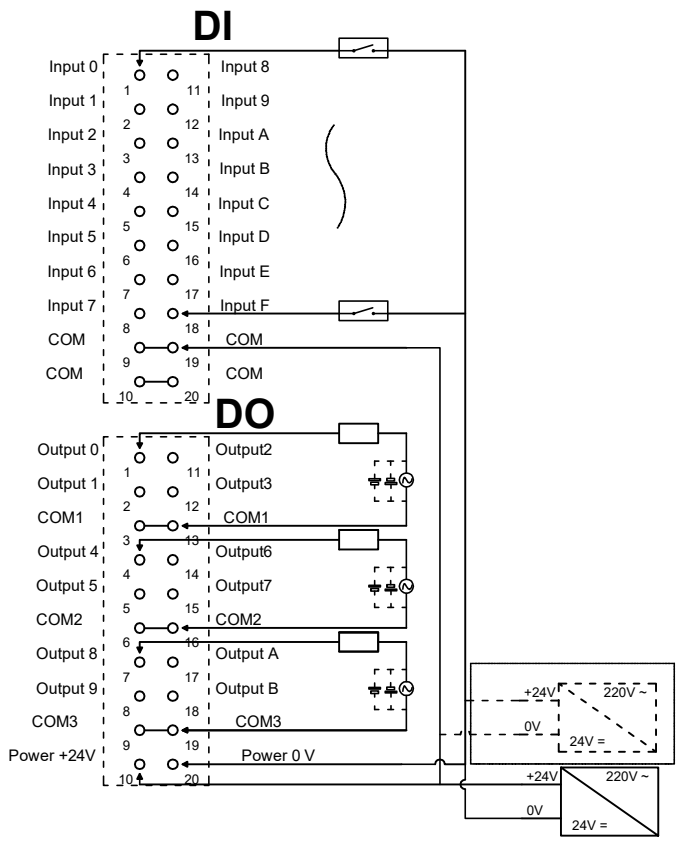

MT4-1612J

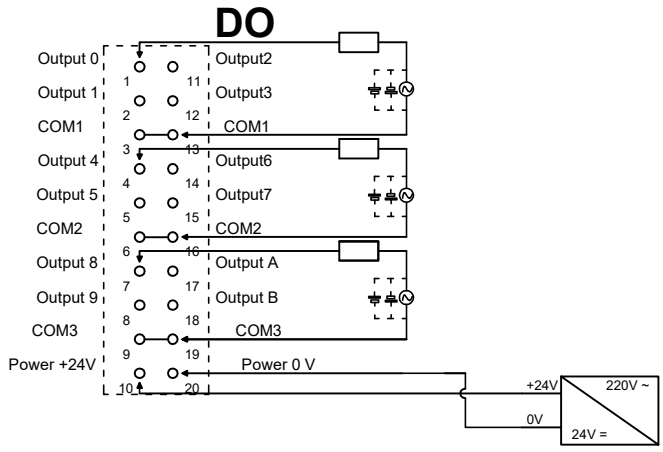

MT4-A0012J

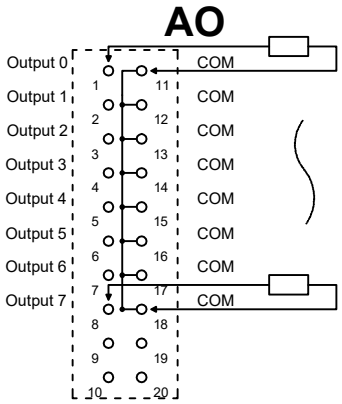

MT4-A08V

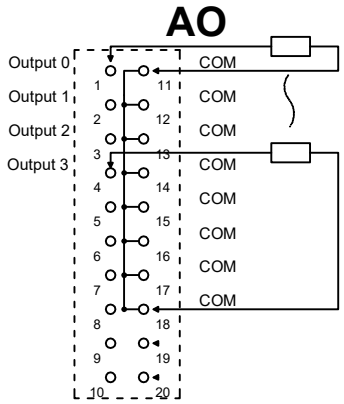

MT4-A04V

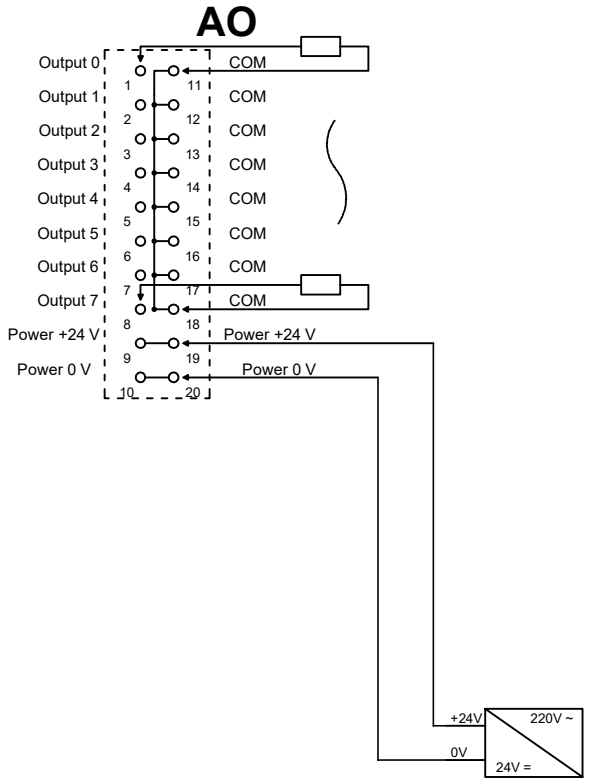

MT4-A08I

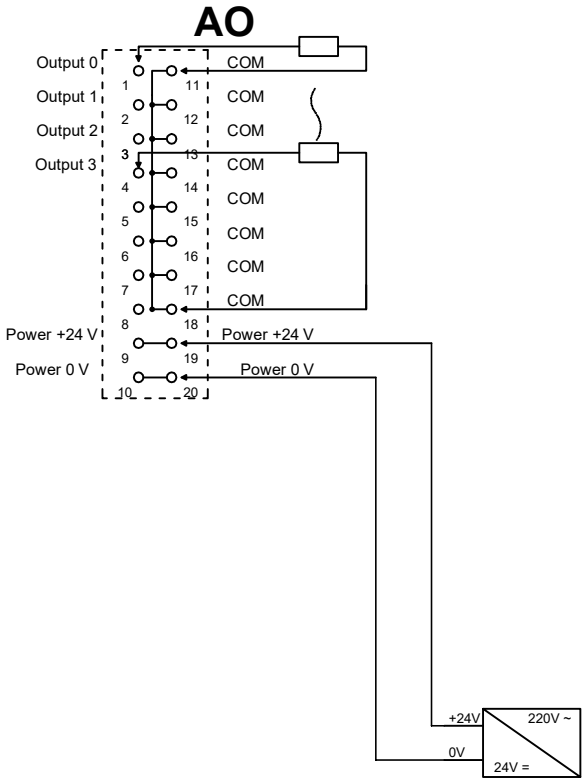

MT4-A04I

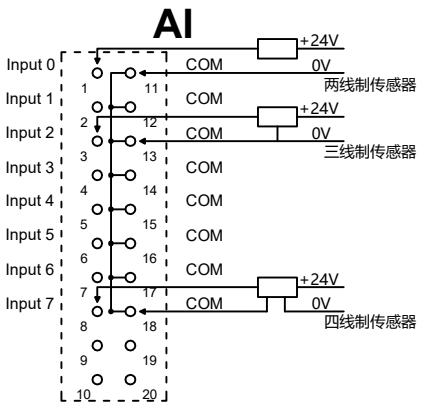

MT4-A80V

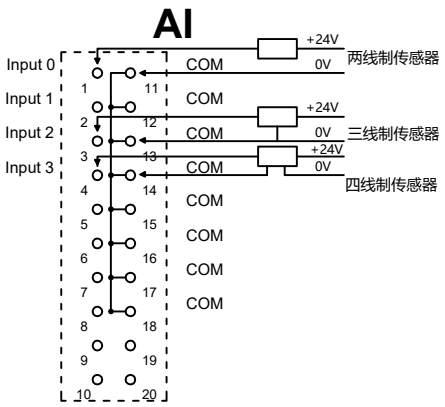

MT4-A40V

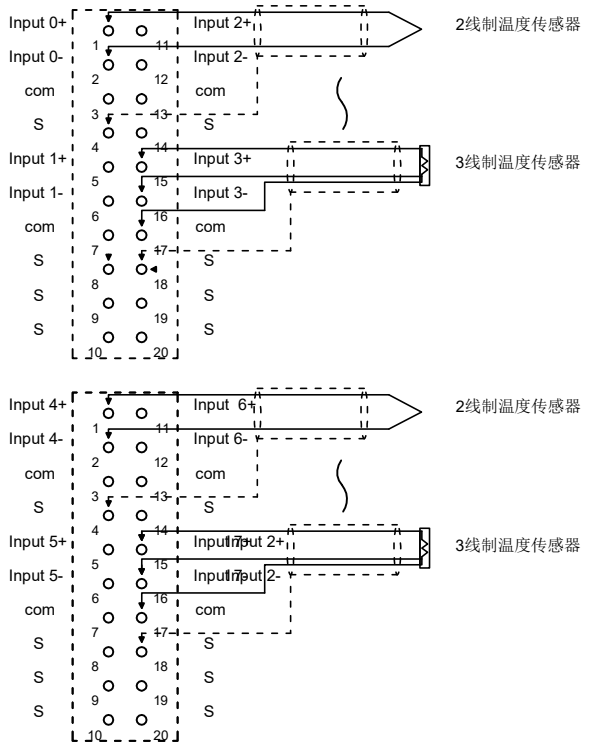

MT4-A80TM

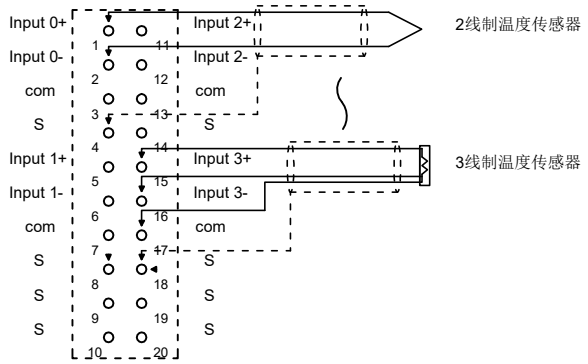

MT4-A40TM

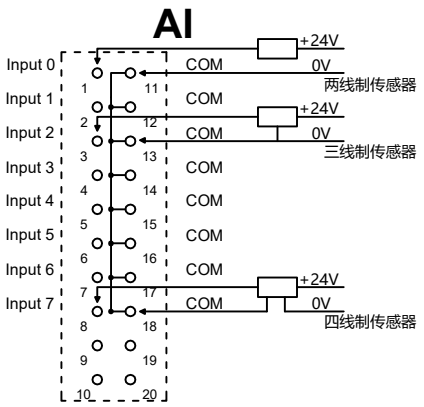

MT4-A80I

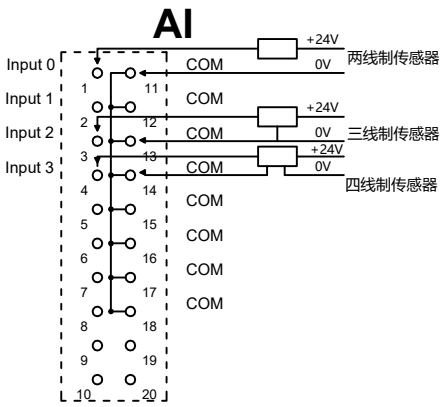

MT4-A40I